３６７７　６２０Ｂ　ユアツ（ソウコウ）（一方ダンプ）（ 箱型三方開 ）

HST LINE　(1-WAY DUMPIMG)(FLAT BED OPENING 3WAYS )

［ USA　NO.6220773　－　NO.6221150］［NO.1000001　－　NO.1000198］

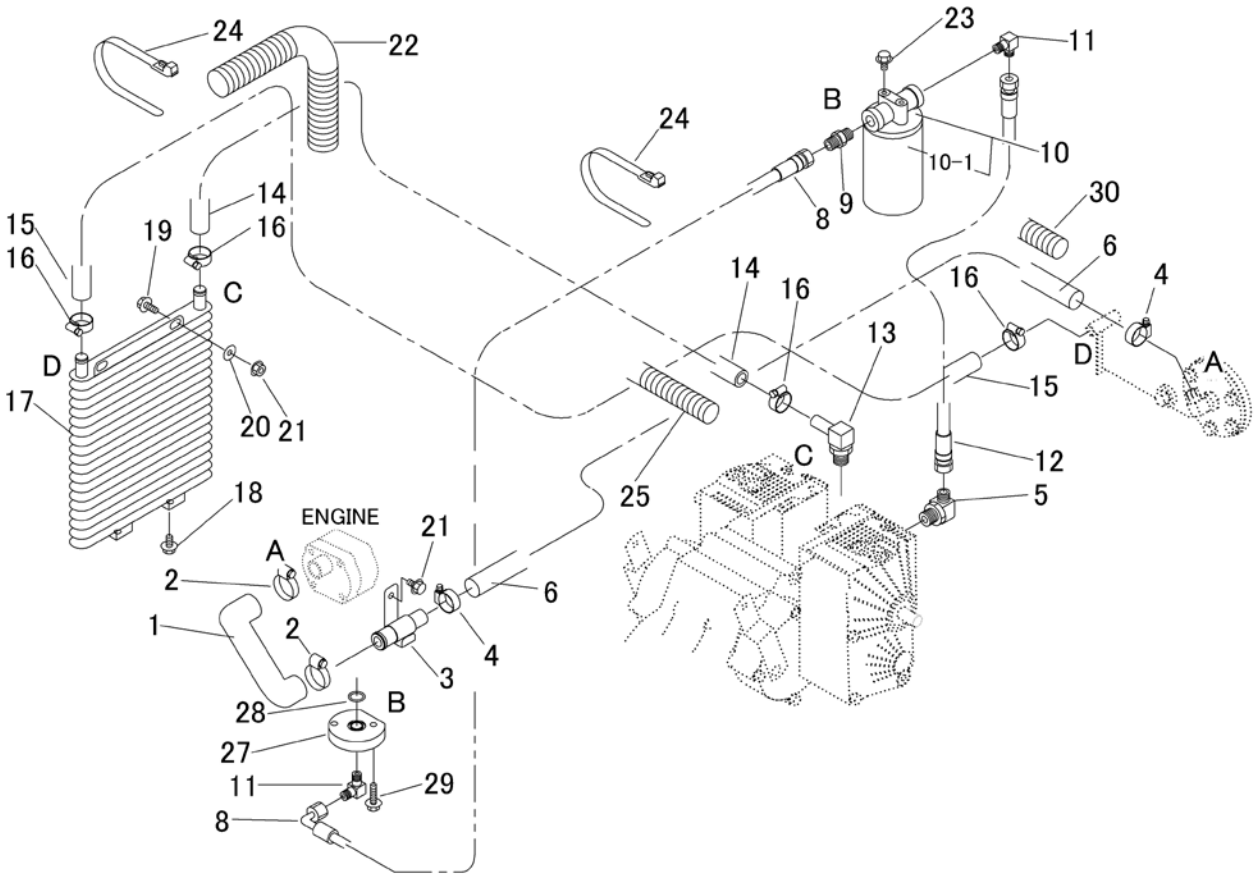


| 見出<br>NO. | 部品番号<br>PART NO. | 部品名称 | PART NAME | 個数<br>Q'ty | 型　寸<br>DESCRIPTION | 互換性<br>R/P | 適用号機<br>FROM ～ UP TO SERIAL NO. | 備　考<br>REMARKS |
|---|---|---|---|---|---|---|---|---|
| 1 | 3677 6216 201 | ﾎｰｽ | HOSE | 1 | | | | |
| 2 | 3629 0059 000 | ABAﾊﾞﾝﾄﾞ | CLIP | 2 | 26-38 | | | |
| 3 | 3677 6221 001 | ﾌﾞﾗｹｯﾄ | BRACKET | 1 | | | | |
| 4 | 3640 6009 000 | ﾊﾞﾝﾄﾞ | BAND | 2 | | | | |
| 5 | 3661 6109 000 | ｻﾞﾂｷｴﾙﾎﾞ | ADAPTER | 1 | 1071-08-06 | | | |
| 6 | 3677 6273 100 | ﾎｰｽ | HOSE | 1 | | | | |
| | | | | | | | | |
| 8 | 3677 6204 000 | ﾎｰｽ | HOSE | 1 | | | | |
| 9 | 3655 5114 000 | ｱﾀﾞﾌﾟﾀ | ADAPTER | 1 | 1009-06 | | | |
| 10 | 3676 6121 000 | ｵｲﾙﾌｨﾙﾀｰ | FILTER | 1 | CP-03-145 | | | |
| 10-1 | 3676 6121 200 | ﾌｨﾙﾀｰ | FILTER | 1 | CP-145 | | | |
| 11 | 3640 6034 000 | ｴﾙﾎﾞ | ADAPTER | 2 | 1034-06 | | | |
| 12 | 3661 6118 000 | ﾎｰｽ | HOSE | 1 | | | | |
| 13 | 3676 6124 000 | ｱﾀﾞﾌﾟﾀ | ADAPTER | 1 | 9076-08-5/8 | | | |
| 14 | 3667 6026 000 | ﾎｰｽ | HOSE | 1 | | | | |
| 15 | 3677 6206 000 | ﾎｰｽ | HOSE | 1 | | | | |
| 16 | 3308 2114 000 | ﾊﾞﾝﾄﾞ | BAND | 4 | | | | |
| 17 | 3667 6028 000 | ｵｲﾙｸｰﾗ | OIL COOLER | 1 | | | | |
| 18 | K700 0106 012 | Fﾎﾞﾙﾄ | BOLT | 2 | M6×12(7T) | | | |
| 19 | K700 0106 016 | Fﾎﾞﾙﾄ | BOLT | 2 | M6×16(7T) | | | |
| 20 | 0350 0140 618 | PW | WASHER | 4 | 6×18×1.6 | | | |
| 21 | F300 0106 000 | Fﾅｯﾄ | NUT | 2 | M6 | | | |
| 22 | 3664 6175 000 | ﾌﾟﾗﾏｰ | TUBE | 1 | | | | |
| 23 | K110 0108 016 | Fﾎﾞﾙﾄ | BOLT | 3 | M8×16(4T) | | | |
| 24 | 3637 0254 000 | ﾌﾟﾗｽﾁｯｸﾊﾞﾝﾄﾞ | BAND | 5 | | | | |

３６７７　６２０Ｂ　ユアツ（ソウコウ）（一方ダンプ）（ 箱型三方開 ）

HST LINE　(1-WAY DUMPIMG)(FLAT BED OPENING 3WAYS )

［　USA　NO.6220773　－　NO.6221150］［NO.1000001　－　NO.1000198］

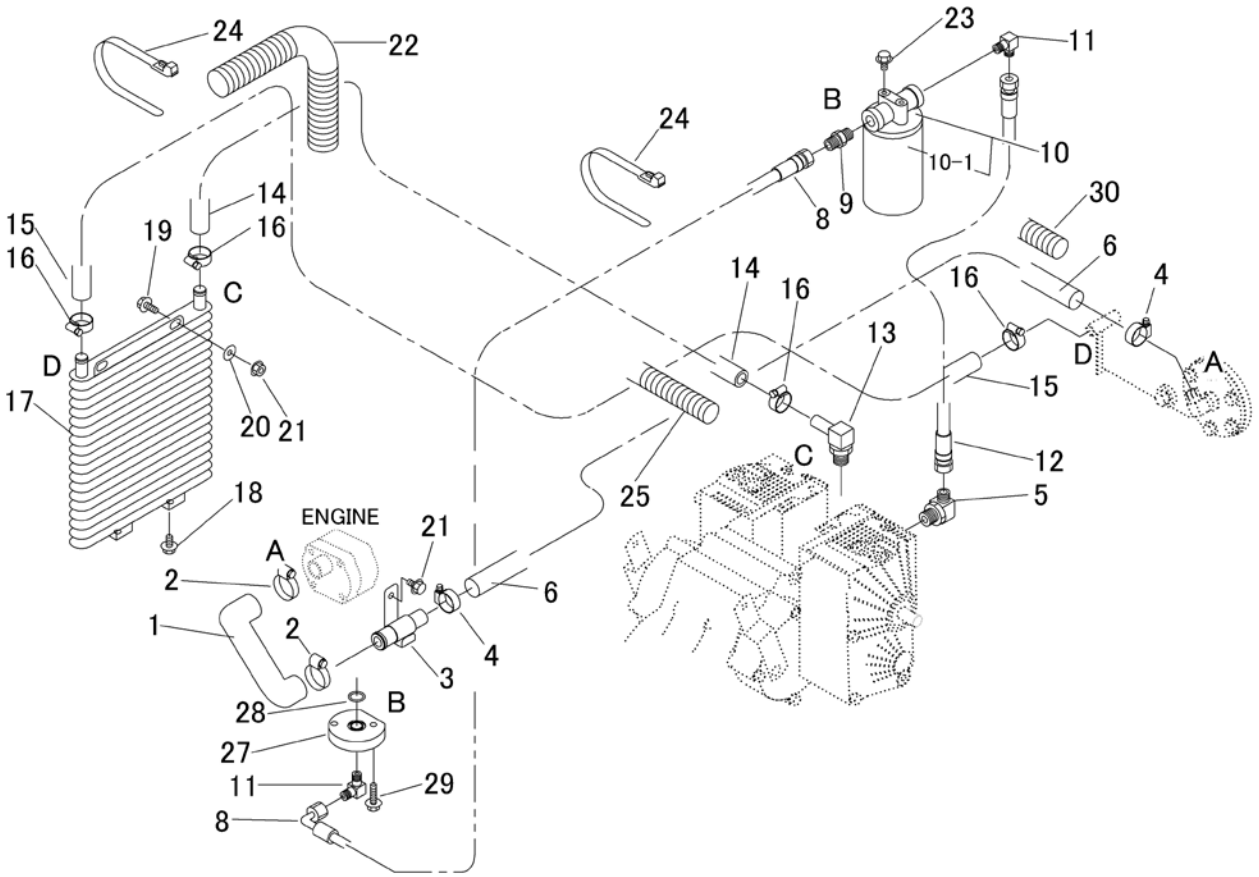


| 見出 NO. | 部品番号 PART NO. | 部品名称 | PART NAME | 個数 Q'ty | 型　寸 DESCRIPTION | 互換性 R/P | 適用号機 FROM ～ UP TO SERIAL NO. | 備　考 REMARKS |
|---|---|---|---|---|---|---|---|---|
| 25 | 3677 6211 000 | ｺﾙｹﾞｰﾄﾁｭｰﾌﾞ | TUBE | 1 | | | | |
| | | | | | | | | |
| 27 | 3677 6231 000 | ﾌﾗﾝｼﾞ | FLANGE | 1 | | | | |
| 28 | 0830 1100 200 | Oﾘﾝｸﾞ | O-RING | 1 | P20 | | | |
| 29 | K814 0108 030 | Fﾎﾞﾙﾄ8T | BOLT | 2 | M8×30(8T) | | | |
| 30 | 3408 5106 000 | ﾌﾟﾗﾏｰ | TUBE | 1 | | | | |