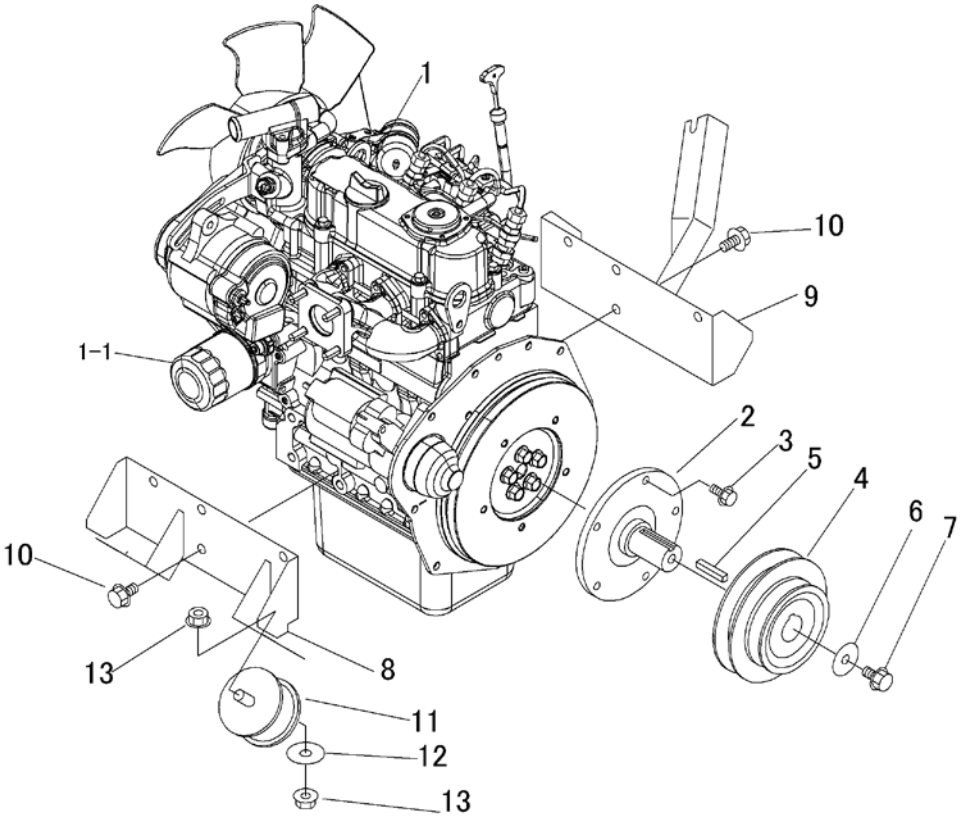


| 見出 NO. | 部品番号 PART NO. | 部品名称 | PART NAME | | 個数 Q'ty | 型 寸 DESCRIPTION | 互換性 R/P | 適用号機 FROM ～ UP TO SERIAL NO. | 備 考 REMARKS |
|---|---|---|---|---|---|---|---|---|---|
| 1 | 36A4 0002 000 | ｴﾝｼﾞﾝ | ENGINE | | 1 | D722-E4B-CRCH-2 | | | |
| 1-1 | ZK1J09032430 | ﾌｲﾙﾀ(ｵｲﾙ､ｶｰﾄﾘｯｼﾞ) | FILTER(OIL,CARTRIDGE) | | 1 | | | | |
| 2 | 3667 0061 000 | ｼｬﾌﾄ | SHAFT | | 1 | | | | |
| 3 | K710 0108 020 | Fﾎﾞﾙﾄ | BOLT | | 5 | M8*20(7T) | | | |
| 4 | 36A4 0004 000 | ﾌﾟｰﾘ | PULLEY | | 1 | | | | |
| 5 | 0571 0007 040 | ｷｰ | KEY | | 1 | 7*40 | | | |
| 6 | 3651 0011 000 | PW | WASHER | | 1 | | | | |
| 7 | K710 0110 020 | Fﾎﾞﾙﾄ | BOLT | | 1 | | | | |
| 8 | 36A4 0011 000 | ﾌﾞﾗｹｯﾄ | BRACKET | | 1 | | | | |
| 9 | 36A4 0021 000 | ﾌﾞﾗｹｯﾄ | BRACKET | | 1 | | | | |
| 10 | K712 0110 020 | Fﾎﾞﾙﾄ | BOLT | | 8 | | | | |
| 11 | 3683 0004 000 | ﾗﾊﾞｰ | RUBBER | | 4 | | | | |
| 12 | 0350 0161 230 | PW | WASHER | | 4 | 12*30*3.0 | | | |
| 13 | F301 0112 000 | Fﾅｯﾄ | NUT | | 4 | M12 | | | |