5318　220A ゼンリン　FRONT　TIRE

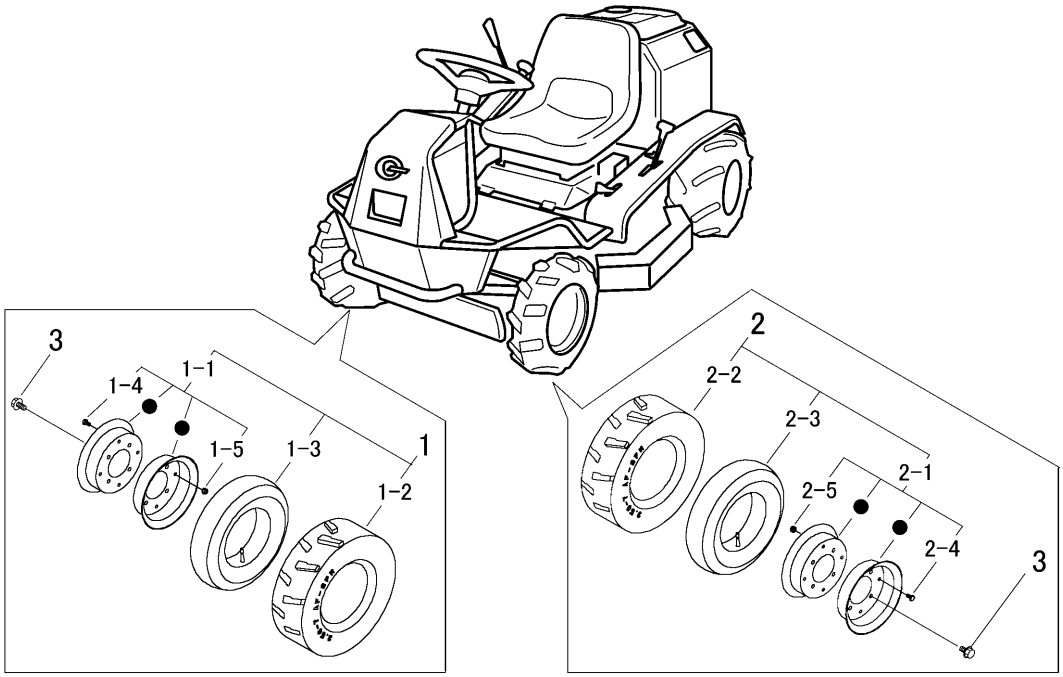

見出 NO.	部品番号 PART NO.	部品名称	PART NAME	個数 Q'ty	型　寸 DESCRIPTION	互換性 R/P	適用号機 FROM ～ UP TO SERIAL NO.	備　考 REMARKS
1	5318 2201 000	ﾀｲﾔAssyR	TIRE	1	AGS 4.00-7 4PR			
1-1	5313 2202 000	ﾘﾑAssy	WHEEL	1				
1-2	5314 2204 000	ﾀｲﾔ	TIRE	1	AGS 4.00-7 4PR			
1-3	5304 2205 000	ﾁｭｰﾌﾞ	TUBE	1	4.00-7			
1-4	A110 0108 016	ﾎﾞﾙﾄ	BOLT	4	M8×16			
1-5	H301 0108 001	Sﾅｯﾄ	NUT	4	M8			
2	5318 2205 000	ﾀｲﾔAssyL	TIRE	1	AGS 4.00-7 4PR			
2-1	5313 2202 000	ﾘﾑAssy	WHEEL	1				
2-2	5314 2204 000	ﾀｲﾔ	TIRE	1	AGS 4.00-7 4PR			
2-3	5304 2205 000	ﾁｭｰﾌﾞ	TUBE	1	4.00-7			
2-4	A110 0108 016	ﾎﾞﾙﾄ	BOLT	4	M8×16			
2-5	H301 0108 001	Sﾅｯﾄ	NUT	4	M8			
3	K710 0110 020	Fﾎﾞﾙﾄ	BOLT	8	M10×20(7T)			