５３０９　２３０Ａ　コウリン　ＲＥＡＲ　ＴＩＲＥ

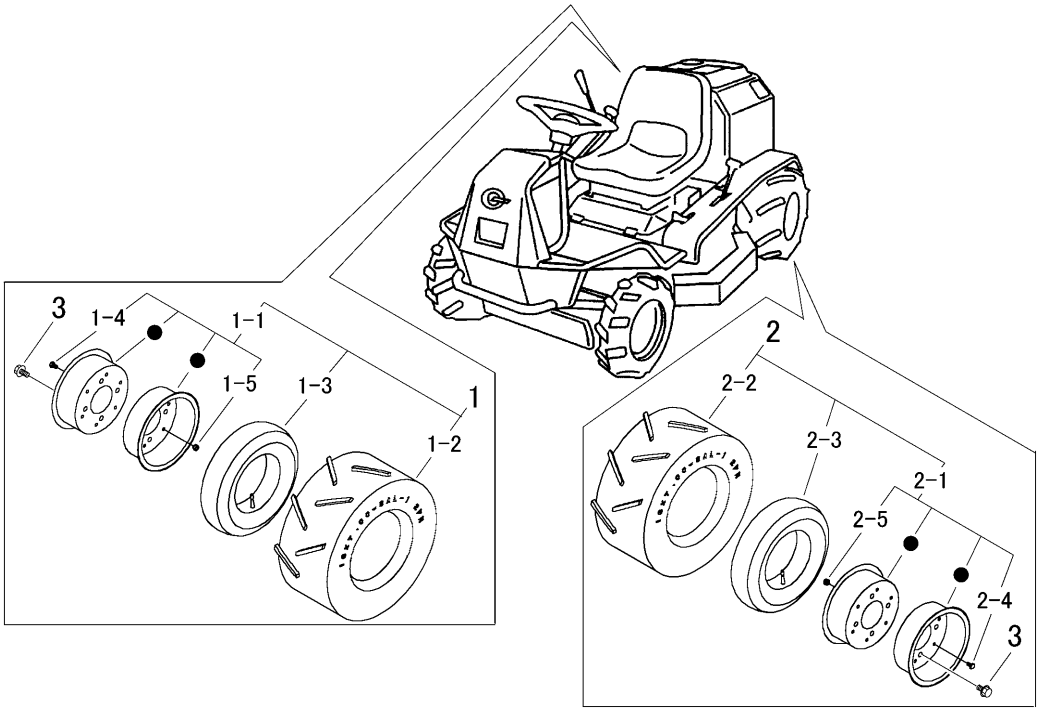

見出 NO.	部品番号 PART NO.	部品名称	PART NAME	個数 Q'ty	型　寸 DESCRIPTION	互換性 R/P	適用号機 FROM ～ UP TO SERIAL NO.	備　考 REMARKS
1	5313 2301 000	ﾀｲﾔAssyR	TIRE	1	16×7.00-8 AL-1 2PR			
1-1	5313 2302 000	ﾎｲｰﾙAssy	WHEEL ASSY	1				
1-2	5304 2301 100	ﾀｲﾔ	TIRE	1	16×7.00-8 AL-1 2PR			
1-3	4201 2543 000	ﾁｭｰﾌﾞ	TUBE	1	16×7.00-8			
1-4	A110 0108 016	ﾎﾞﾙﾄ	BOLT	6	M8×16			
1-5	H301 0108 001	Sﾅｯﾄ	NUT	6	M8			
2	5313 2306 000	ﾀｲﾔAssyL	TIRE	1	16×7.00-8 AL-1 2PR			
2-1	5313 2302 000	ﾎｲｰﾙAssy	WHEEL ASSY	1				
2-2	5304 2301 100	ﾀｲﾔ	TIRE	1	16×7.00-8 AL-1 2PR			
2-3	4201 2543 000	ﾁｭｰﾌﾞ	TUBE	1	16×7.00-8			
2-4	A110 0108 016	ﾎﾞﾙﾄ	BOLT	6	M8×16			
2-5	H301 0108 001	Sﾅｯﾄ	NUT	6	M8			
3	F114 0112 025	ｾﾑｽA	BOLT	8	M12×25			