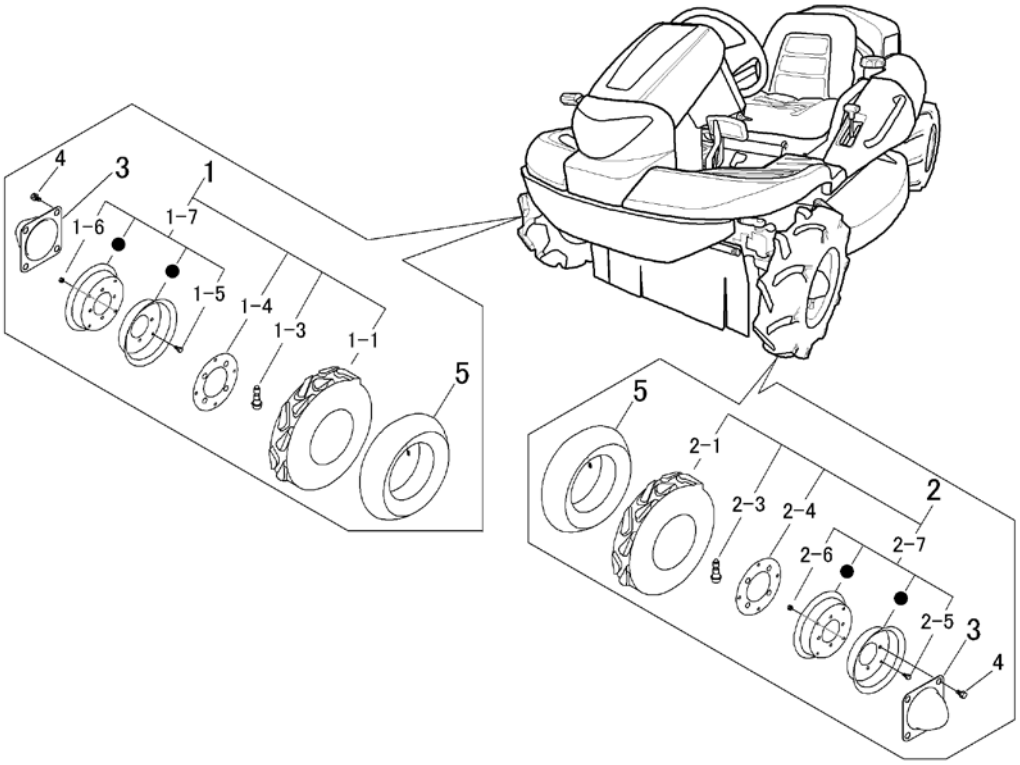

見出 NO.	部品番号 PART NO.	部品名称	PART NAME		個数 Q'ty	型 寸 DESCRIPTION	互換性 R/P	適用号機 FROM ～ UP TO SERIAL NO.	備 考 REMARKS
1	5347 2231 000	ﾀｲﾔASSYR	TIRE ASSY		1				ｼﾙﾊﾞｰ
1-1	5347 2202 000	ﾀｲﾔ	TIRE		1				CANYCOM
1-3	5347 2304 000	ﾊﾞﾙﾌﾞ	VALVE		1				
1-4	5347 2206 000	ﾊﾟｯｷﾝ	PACKING		1				
1-5	A110 0108 016	ﾎﾞﾙﾄ	BOLT		4				
1-6	H301 0108 001	Sﾅｯﾄ	NUT		4				
1-7	5313 2202 000	ﾘﾑASSY	WHEEL ASSY		1				ｼﾙﾊﾞｰ
2	5347 2235 000	ﾀｲﾔASSYL	TIRE ASSY		1				ｼﾙﾊﾞｰ
2-1	5347 2202 000	ﾀｲﾔ	TIRE		1				CANYCOM
2-3	5347 2304 000	ﾊﾞﾙﾌﾞ	VALVE		1				
2-4	5347 2206 000	ﾊﾟｯｷﾝ	PACKING		1				
2-6	A110 0108 016	ﾎﾞﾙﾄ	BOLT		4				
2-5	H301 0108 001	Sﾅｯﾄ	NUT		4				
2-7	5313 2202 000	ﾘﾑASSY	WHEEL ASSY		1				ｼﾙﾊﾞｰ
3	5332 2211 000	ｷｬｯﾌﾟ	CAP		2				
4	K712 0110 020	Fﾎﾞﾙﾄ	BOLT		8				
5	5304 2205 000	ﾁｭｰﾌﾞ	TUBE		1				ｵﾌﾟｼｮﾝ