5332 220A 000 ゼンリン(CE AU)(AG) Front Tire(CE AU)(AG)

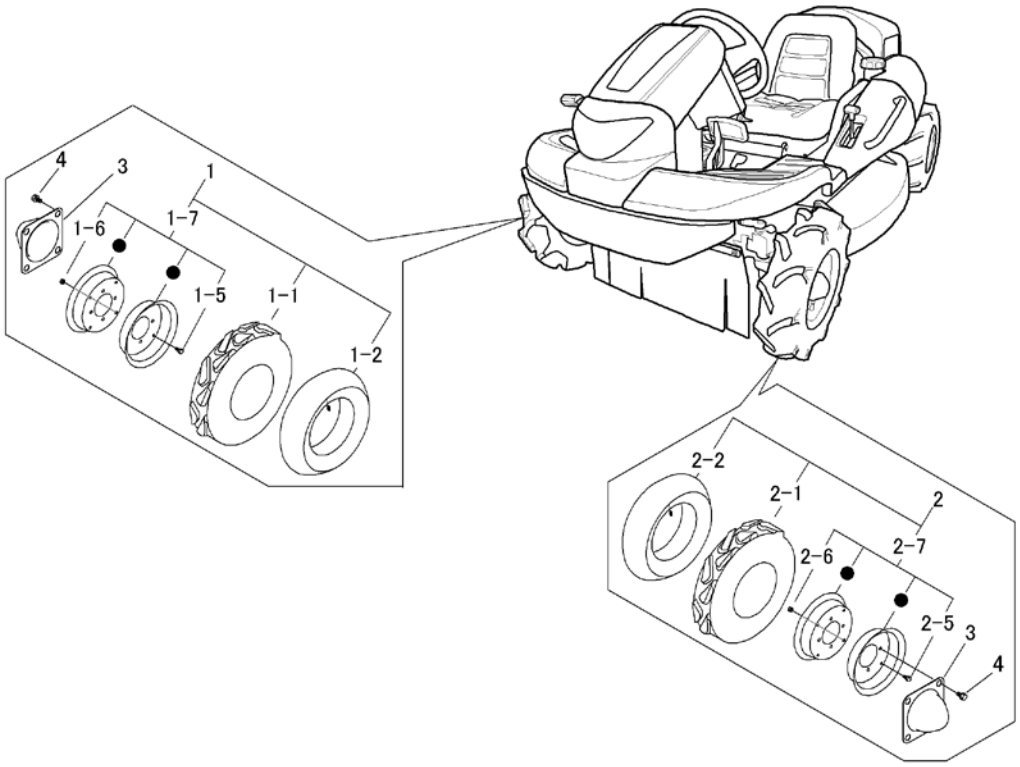

見出	部品番号	部品名称		個数	型　寸	互換性	適用号機	備考
NO.	PART NO.		PART NAME	Q'ty	DESCRIPTION	R/P	FROM ～ UP TO SERIAL NO.	REMARKS
1	5332 2201 000	ﾀｲﾔASSYR	TIRE ASSY	1	4.00-7-2PR			
1-1	5332 2202 000	ﾀｲﾔ	TIRE	1				
1-2	5304 2205 000	ﾁｭｰﾌﾞ	TUBE	1				
1-5	A110 0108 016	ﾎﾞﾙﾄ	BOLT	4	M8×16			
1-6	H301 0108 001	Sﾅｯﾄ	NUT	4	M8			
1-7	5313 2202 000	ﾘﾑASSY	WHEEL ASSY	1				
2	5332 2205 000	ﾀｲﾔASSYL	TIRE ASSY	1	4.00-7-2PR			
2-1	5332 2202 000	ﾀｲﾔ	TIRE	1				
2-2	5304 2205 000	ﾁｭｰﾌﾞ	TUBE	1				
2-6	A110 0108 016	ﾎﾞﾙﾄ	BOLT	4	M8×16			
2-5	H301 0108 001	Sﾅｯﾄ	NUT	4	M8			
2-7	5313 2202 000	ﾘﾑASSY	WHEEL ASSY	1				
3	5332 2211 000	ｷｬｯﾌﾟ	CAP	2				
4	K712 0110 020	Fﾎﾞﾙﾄ	BOLT	8	M10×20			