# 7205 400B　ブレーキクミタテ　BRAKE　EQUIPMENT

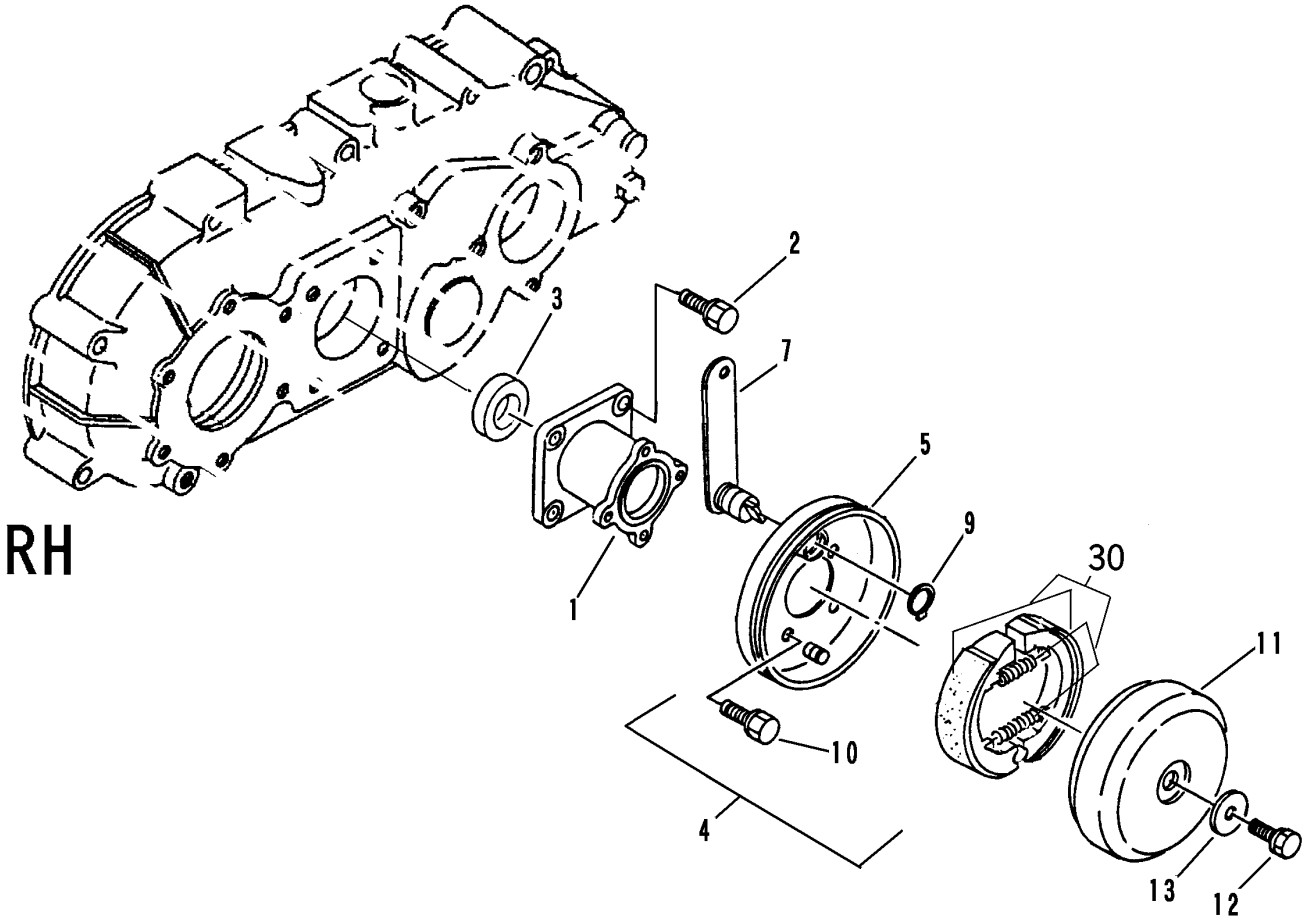


| 見出 NO. | 部品番号 PART NO. | 部品名称 | PART NAME | 個数 Q'ty | 型　寸 DESCRIPTION | 適用号機 FROM ～ UP TO SERIAL NO. | 備　考 REMARKS |
|---|---|---|---|---|---|---|---|
| 1 | 7205 4002 000 | ﾌﾞﾚｰｷﾄﾘﾂｹﾒﾀﾙ | FLANGE | 1 | | | |
| 2 | K710 0108 020 | Fﾎﾞﾙﾄ | BOLT | 4 | M8×20 | | |
| 3 | 0840 1025 457 | ｵｲﾙｼｰﾙ | SEAL | 1 | UE25457 | | |
| 4 | 7205 4003 100 | ﾌﾞﾚｰｷﾌﾟﾚｰﾄ | PLATE | 1 | φ110 | | NO.5～NO.9･NO.30を含む |
| 5 | 7205 4003 200 | ﾊﾟｯｷﾝｸﾞﾌﾟﾚｰﾄ | PLATE | 1 | | | |
| 7 | 7205 4003 700 | ﾌﾞﾚｰｷﾚﾊﾞｰ | LEVER | 1 | | | |
| 9 | 0740 0001 600 | Cﾘﾝｸﾞ | RING | 1 | S16 | | |
| 10 | K700 0606 014 | Fﾎﾞﾙﾄ | BOLT | 4 | M6×14 | | |
| 11 | 7205 4008 001 | ﾌﾞﾚｰｷﾄﾞﾗﾑ | DRUM | 1 | | | |
| 12 | K710 0608 016 | Fﾎﾞﾙﾄ | BOLT | 1 | M8×16 | | |
| 13 | 0350 0160 828 | PW | WASHER | 1 | 8×28×3.2 | | |
| 30 | 7301 9901 000 | ｼｭｰｾｯﾄ | SHOE SET | 1 | | | |