# ７３０６　４２０Ａ　ブレーキ　BRAKE

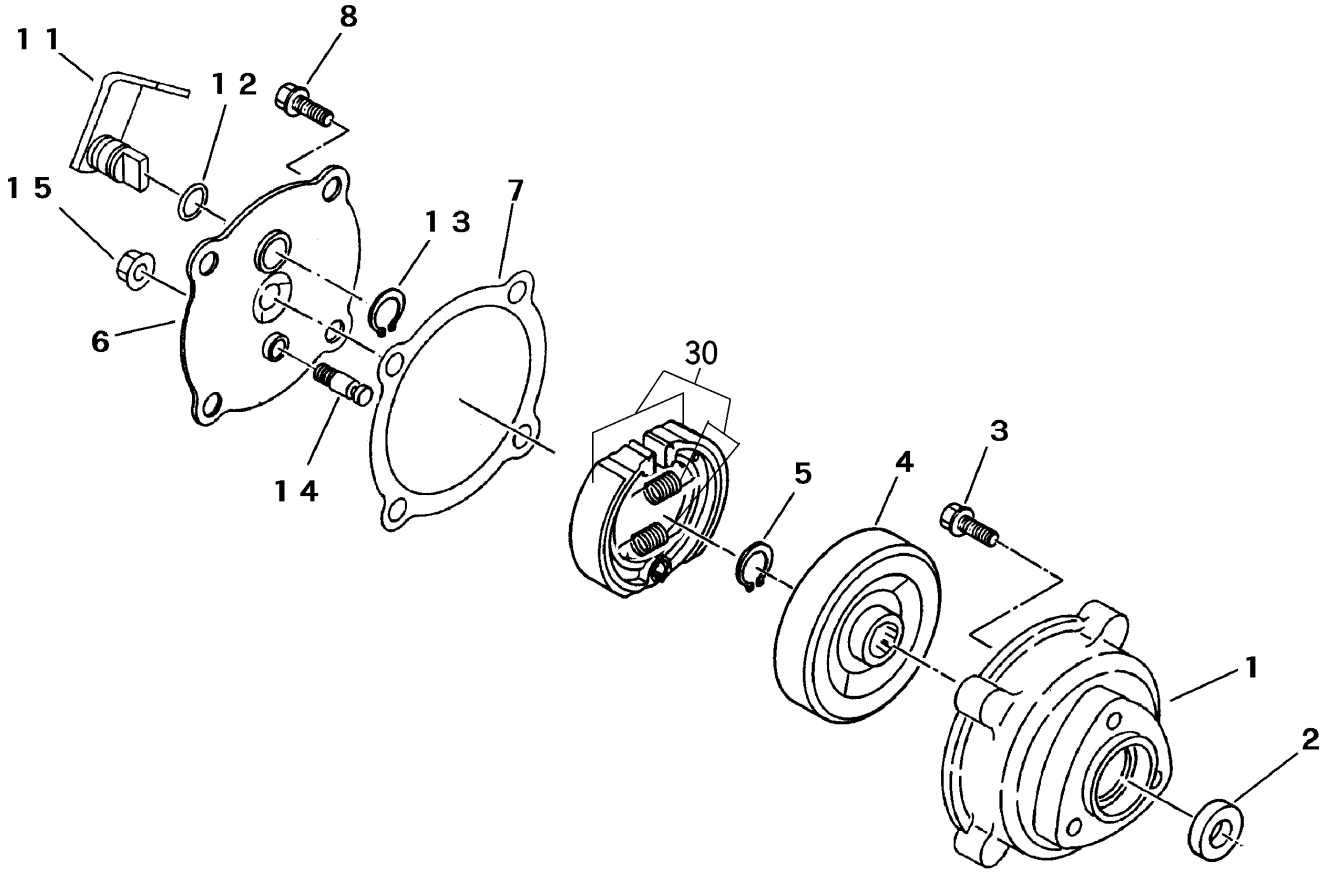


| 見出 | 部品番号 | 部品名称 | | 個数 | 型　寸 | 適用号機 | 備考 |
|---|---|---|---|---|---|---|---|
| NO. | PART NO. | | PART NAME | Q'ty | DESCRIPTION | FROM ～ UP TO SERIAL NO. | REMARKS |
| 1 | 7306 4201 000 | ﾌﾞﾚｰｷﾄﾘﾂｹ | BRACKET | 1 | | | |
| 2 | 0840 1017 328 | ｵｲﾙｼｰﾙ | SEAL | 1 | UE17328 | | |
| 3 | K710 0108 025 | Fﾎﾞﾙﾄ | BOLT | 3 | M8×25 2410 | NO.01925～（ﾐｯｼｮﾝ号機） | |
| 3 | A544 0708 025 | ｷｬｯﾌﾟｽｸﾘｭｰ | BOLT | 3 | M8×25 | ～NO.01924（ﾐｯｼｮﾝ号機） | |
| 4 | 7306 4205 000 | ﾌﾞﾚｰｷﾄﾞﾗﾑ | DRUM | 1 | | | |
| 5 | 0740 0001 600 | Cﾘﾝｸﾞ | RING,SNAP | 2 | S16 | | |
| 6 | 7309 4001 000 | ﾊﾞｯｷﾝｸﾞﾌﾟﾚｰﾄ | PLATE | 1 | | | |
| 7 | 7309 4005 000 | ﾊﾟｯｷﾝB | PACKING | 1 | | | |
| 8 | K710 0108 016 | Fﾎﾞﾙﾄ | BOLT | 4 | M8×16 | | |
| 11 | 7306 4215 000 | ﾌﾞﾚｰｷﾚﾊﾞｰ | LEVER | 1 | | | |
| 12 | 0830 0100 120 | Oﾘﾝｸﾞ | O-RING | 1 | P-12 | | |
| 13 | 0740 0001 600 | Cﾘﾝｸﾞ | RING,SNAP | 1 | S16 | | |
| 14 | 7305 4014 000 | ｱﾝｶｰﾋﾟﾝ | PIN | 1 | | | |
| 15 | F301 0110 000 | Fﾅｯﾄ | NUT | 1 | M10 | | |
| 30 | 7301 9901 000 | ｼｭｰｾｯﾄ | SHOE　SET | 1 | | | |