# ３５５７　２４０Ａ　ドウリョクデンタツクミタテ　POWER　LINE　EQUIPMENT

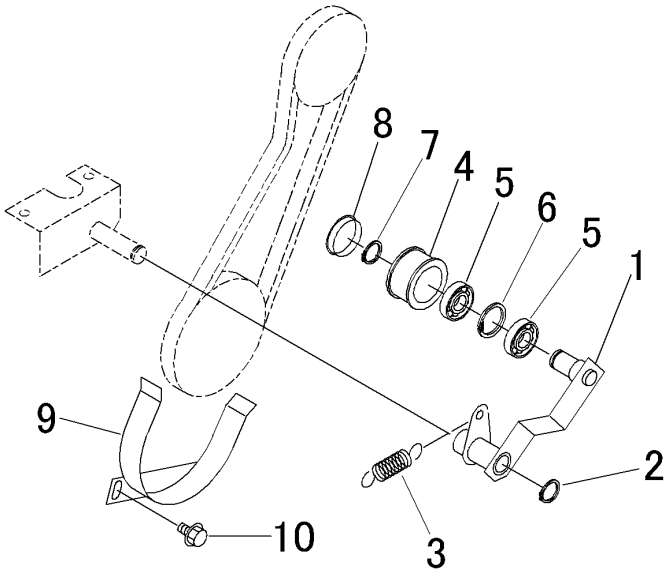


| 見出 NO. | 部品番号 PART NO. | 部品名称 | PART NAME | 個数 Q'ty | 型　寸 DESCRIPTION | 適用号機 FROM ～ UP TO SERIAL NO. | 備　考 REMARKS |
|---|---|---|---|---|---|---|---|
| 1 | 3557 2401 000 | ﾃﾝｼｮﾝｱｰﾑ | TENSION ARM | 1 | | | |
| 2 | 0740 0001 600 | Cﾘﾝｸﾞ | RING | 1 | S16 | | |
| 3 | 3205 2005 000 | ｽﾌﾟﾘﾝｸﾞ | SPRING | 1 | #38 | | |
| 4 | 5305 2406 000 | ﾃﾝｼｮﾝﾌﾟｰﾘ | PULLEY | 1 | | | |
| 5 | 0750 0560 034 | ﾍﾞｱﾘﾝｸﾞ | BEARING | 2 | 6003DDU | | |
| 6 | 0741 0003 500 | Cﾘﾝｸﾞ | RING | 1 | H35 | | |
| 7 | 0740 0001 700 | Cﾘﾝｸﾞ | RING | 1 | S17 | | |
| 8 | 0834 0035 070 | ｼｰﾙｷｬｯﾌﾟ | CAP | 1 | 35×7 | | |
| 9 | 3557 2406 000 | ｽﾄｯﾊﾟ | STOPPER | 1 | | | |
| 10 | K110 0108 016 | Fﾎﾞﾙﾄ | BOLT | 2 | M8×16(4T) | | |