# ３５４４　５００Ｂ　シュドウダンプ　クミタテ　（箱型三方開）
# BED LOCKING DEVICE EQIPMENT （FLAT BED OPENING 3 WAYS）

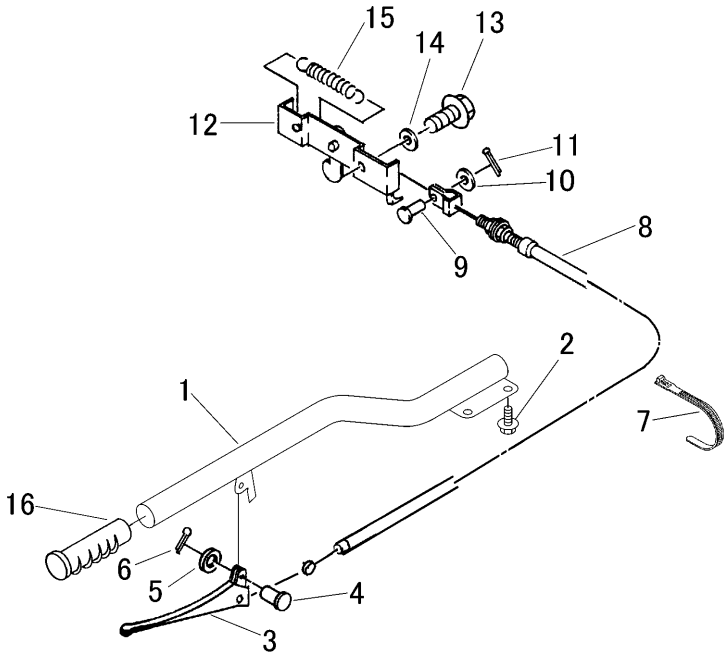


| 見出 NO. | 部品番号 PART NO. | 部品名称 | PART NAME | 個数 Q'ty | 型　寸 DESCRIPTION | 適用号機 FROM ～ UP TO SERIAL NO. | 備　考 REMARKS |
|---|---|---|---|---|---|---|---|
| 1 | 3544 5011 001 | ﾀﾞﾝﾌﾟﾚﾊﾞｰ | LEVER | 1 | | | |
| 2 | K110 0108 016 | Fﾎﾞﾙﾄ | BOLT | 4 | M8×16(4T) | | |
| 3 | 3514 6006 000 | ﾚﾊﾞｰ | LEVER | 1 | | | |
| 4 | 0562 0106 020 | ﾋﾗｱﾀﾏﾋﾟﾝ | PIN | 1 | | | |
| 5 | 0350 0130 613 | PW | WASHER | 1 | 6×13×1.0 | | |
| 6 | 0520 0116 012 | ﾜﾘﾋﾟﾝ | PIN SPLIT | 1 | 1.6×12 | | |
| 7 | 3513 3131 000 | ﾌﾟﾗｽﾁｯｸﾊﾞﾝﾄﾞ | BAND | 1 | | | |
| 8 | 3513 6002 000 | ﾜｲﾔｰ | WIRE | 1 | | | |
| 9 | 0562 0106 016 | ﾋﾗｱﾀﾏﾋﾟﾝ | PIN | 1 | φ6×16 | | |
| 10 | 0350 0130 613 | PW | WASHER | 1 | 6×13×1.0 | | |
| 11 | 0520 0120 012 | ﾜﾘﾋﾟﾝ | PIN SPLIT | 1 | 2.0×12 | | |
| 12 | 3513 6005 011 | ﾛｯｸｶﾅｸﾞｺﾝﾌﾟ | SUPPORT | 1 | | | |
| 13 | K110 0108 016 | Fﾎﾞﾙﾄ | BOLT | 2 | M8×16(4T) | | |
| 14 | 0350 0140 822 | PW | WASHER | 2 | 8×22×1.6 | | |
| 15 | 3617 3227 000 | ｽﾌﾟﾘﾝｸﾞ | SPRING | 1 | | | |
| 16 | 3205 1051 000 | ﾆｷﾞﾘ | GRIP | 1 | | | |
| | | | | | | | |
| | | | | | | | |
| | | | | | | | |
| | | | | | | | |
| | | | | | | | |
| | | | | | | | |
| | | | | | | | |
| | | | | | | | |
| | | | | | | | |