5304　220A　ゼンリンクミタテ　FRONT　TIRE　EQUIPMENT

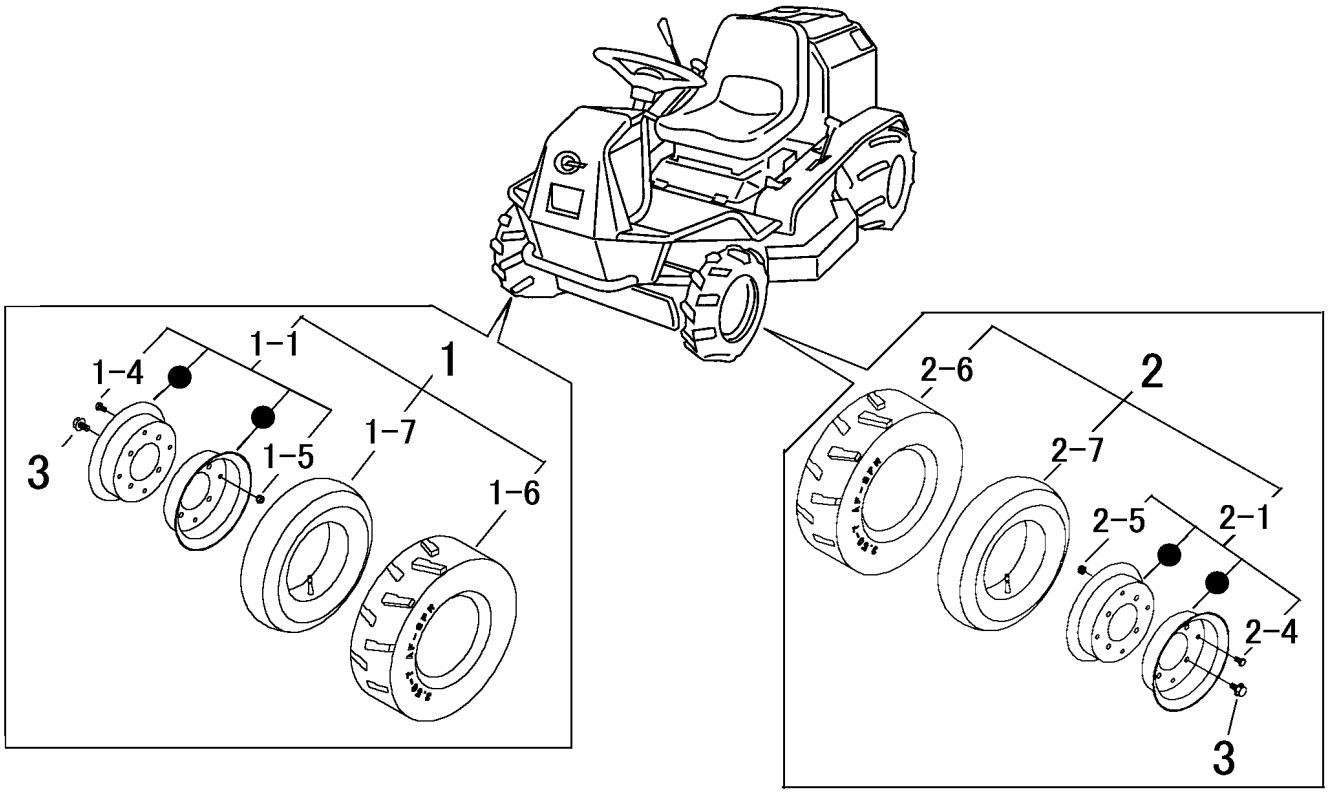

見出	部品番号	部品名称		個数	型　寸	適用号機	備　考
NO.	PART NO.		PART NAME	Q'ty	DESCRIPTION	FROM ～ UP TO SERIAL NO	REMARKS
1	5304 2201 000	ﾀｲﾔAssyR	TIRE ASSY R	1	350-7 AF-5		
1-1	5304 2201 500	ﾘﾑAssy	RIM ASSY	1			
1-4	A110 0108 016	ﾎﾞﾙﾄ	BOLT	4	M8×16		
1-5	H301 0108 001	Sﾅｯﾄ	NUT	4	M8		
1-6	5304 2204 000	ﾀｲﾔ	TIRE	1			
1-7	5304 2205 000	ﾁｭｰﾌﾞ	TUBE	1			
2	5304 2206 000	ﾀｲﾔAssyL	TIRE ASSY L	1	350-7 AF-5		
2-1	5304 2201 500	ﾘﾑAssy	RIM ASSY	1			
2-4	A110 0108 016	ﾎﾞﾙﾄ	BOLT	4	M8×16		
2-5	H301 0108 001	Sﾅｯﾄ	NUT	4	M8		
2-6	5304 2204 000	ﾀｲﾔ	TIRE	1			
2-7	5304 2205 000	ﾁｭｰﾌﾞ	TUBE	1			
3	K710 0110 020	Fﾎﾞﾙﾄ	BOLT	8	M10×20		